A	B	C	D	E	F	G	H	J	K

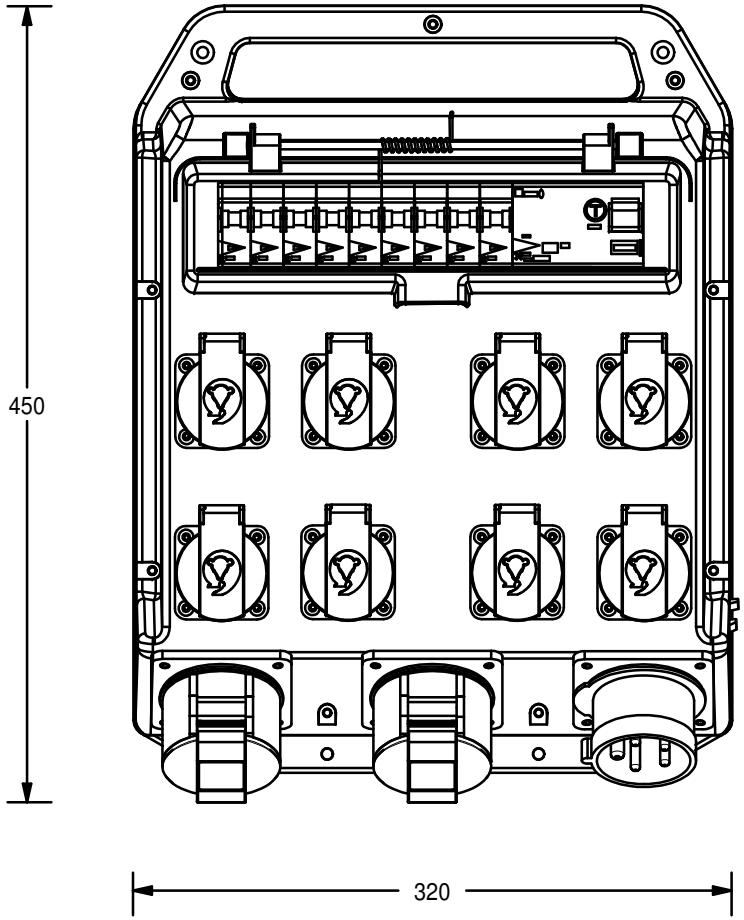

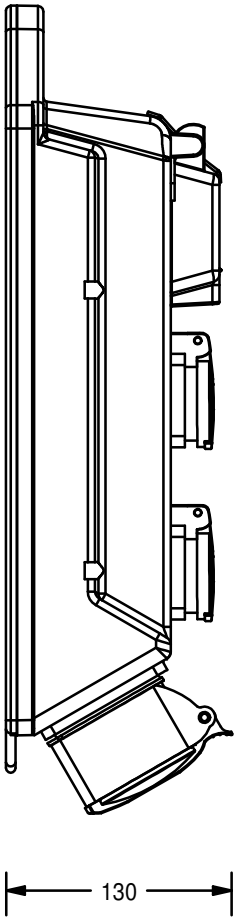

ARTIKELNR./ ARTICLE NO.
E2467131

MÄRKSTRÖM/ CURRENT RATING
32 A

MEASURING EQUIPMENT
CURR.-TRAFO-SPACE | ENERGY-METER-SPACE

FAST ANSLUTNING/ FIXED CONNECTIONS
<125A | >125A

CEE-OUTLETS 3-POLE/230V
16A | 32A | 63A | 125A

SCHUKO OUTLETS 2-POLE/230V
16A
8

CEE-OUTLETS 5-POLE/400V
16A | 32A | 63A | 125A
1 | 1

JFB/RCCB
<0,03A | >0,3A | >0,03A & <0,3A
1

JFB/RCCB
Variable

VIKT/WEIGHT
3,9 kg

This drawing is property of El-Björn. May not be copied, shown or distributed without our written permission.

UTTAGSCENTRAL
U 32Midi//811-1 EN

EL-BJÖRN
www.elbjorn.com

RITAD AV/DRAWN BY	DATUM/DATE	NEXT SHEET	SHEET
CG	130211	2	1
SIGN	REVISION/ISSUE	RITNINGS NR./DRAWING	
	A*	E2467131	

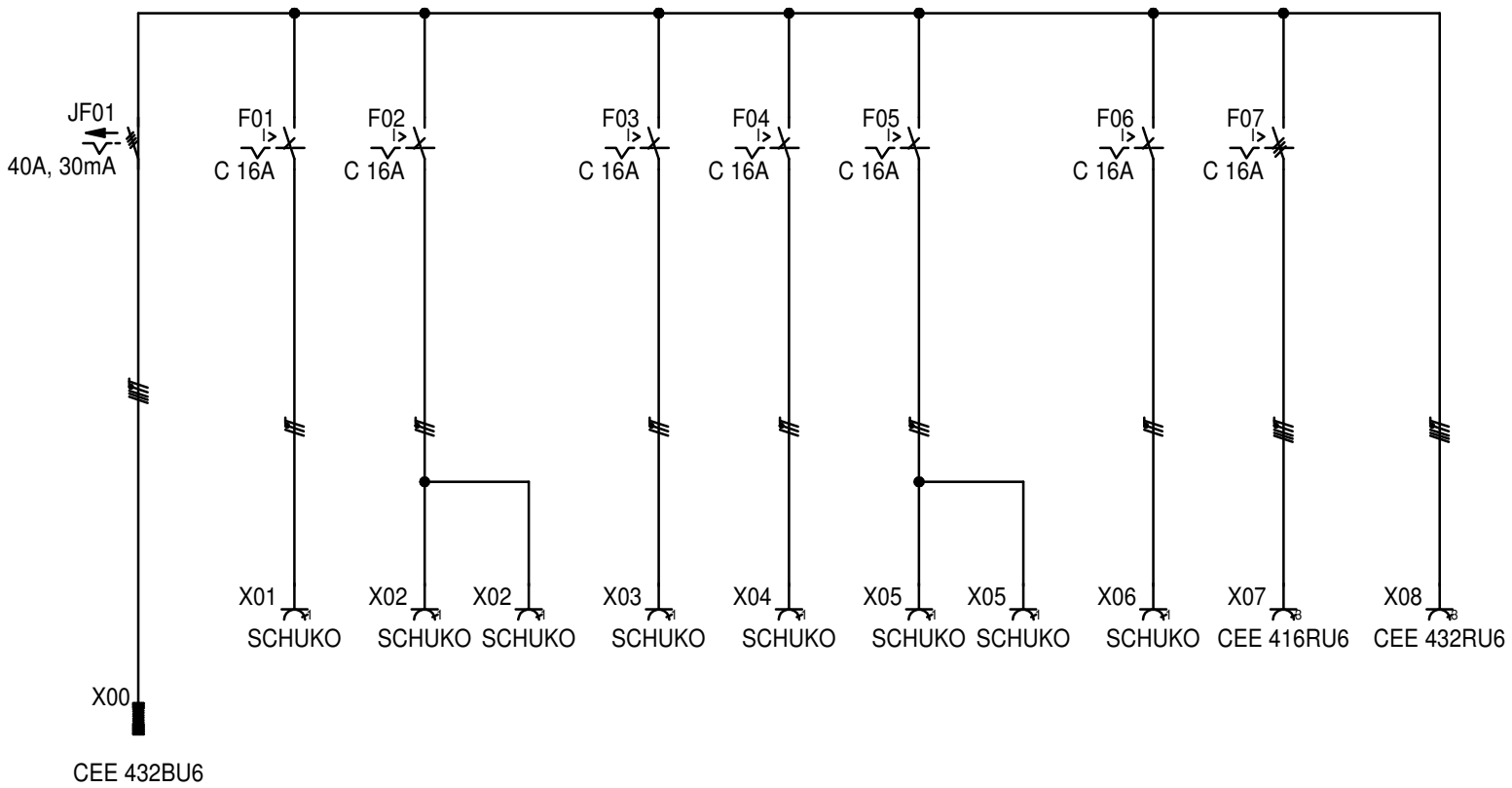

ARTIKELNR./ ARTICLE NO.	E2467131
MÄRKSTRÖM/ CURRENT RATING	32 A
MEASURING EQUIPMENT	CURR.-TRAFO-SPACE / ENERGY-METER-SPACE
FAST ANSLUTNING/ FIXED CONNECTIONS	<125A / >125A
CEE-OUTLETS 3-POLE/230V	16A / 32A / 63A / 125A
SCHUKO OUTLETS 2-POLE/230V	16A: 8
CEE-OUTLETS 5-POLE/400V	16A: 1 / 32A: 1 / 63A / 125A
JFB/RCCB	<0,03A: 1 / >0,3A / >0,03A & <0,3A
JFB/RCCB	Variable
VIKT/WEIGHT	3,9 kg

This drawing is property of El-Björn. May not be copied, shown or distributed without our written permission.

UTTAGSCENTRAL
U 32Midi//811-1 EN

EL-BJÖRN
www.elbjorn.com

RITAD AV/DRAWN BY	DATUM/DATE	NEXT SHEET	SHEET
CG	130211	3	2
SIGN	REVISION/ISSUE A*	RITNINGS NR./DRAWING E2467131	

A	B	C	D	E	F	G	H	J	K

PC.	Position	Description	Type	Manufacturer	Data	Article No.	E-number(SE)
1	-	Elväska	MIDI (8)	El-Björn	320 x 450 x 130		
6	F01-F06	Automatsäkring	PLS6, 6kA, 1P	Eaton	C 16A	242681	2141469
1	F07	Automatsäkring	PLS6, 6kA, 3P	Eaton	C 16A	242949	2141509
1	JF01	Jordfelsbrytare	PFIM, 4-P	Eaton	40A, 30mA	235439	2162237
1	X00	Panelintag	432BU6	ABB	32A, 400V, IP44	432BU6	1964033
8	X01-X06	Schukouttag	35218, Typ F, Skruv	Mennekes	16A, 230V, IP54	11020EB	
1	X07	Paneluttag	416RU6	ABB	16A, 400V, IP44	416RU6	1961483
1	X08	Paneluttag	432RU6	ABB	32A, 400V, IP44	432RU6	1961633

ARTIKELNR./ ARTICLE NO.
E2467131

MÄRKSTRÖM/ CURRENT RATING
32 A

MEASURING EQUIPMENT
CURR.-TRAFO-SPACE | ENERGY-METER-SPACE

FAST ANSLUTNING/ FIXED CONNECTIONS
<125A | >125A

CEE-OUTLETS 3-POLE/230V
16A | 32A | 63A | 125A

SCHUKO OUTLETS 2-POLE/230V
16A
8

CEE-OUTLETS 5-POLE/400V
16A | 32A | 63A | 125A
1 | 1

JFB/RCCB
<0,03A | >0,3A | >0,03A & <0,3A
1

JFB/RCCB
Variable

VIKT/WEIGHT
3,9 kg

This drawing is property of El-Björn. May not be copied, shown or distributed without our written permission.

UTTAGSCENTRAL
U 32Midi//811-1 EN

EL-BJÖRN
www.elbjorn.com

RITAD AV/DRAWN BY	DATUM/DATE	NEXT SHEET	SHEET
CG	130211		3
SIGN	REVISION/ISSUE	RITNINGS NR./DRAWING	
	A*	E2467131	